Name : _____ Score : _____

Translation of Shapes

Sheet 1

Write a rule to describe each translation.

1)

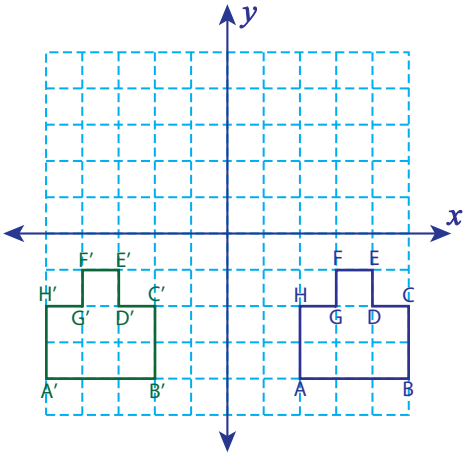

_____

2)

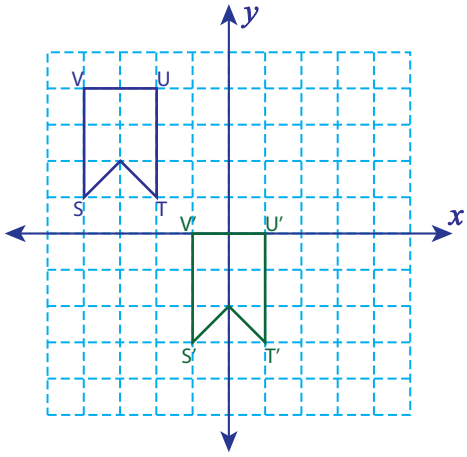

_____

3)

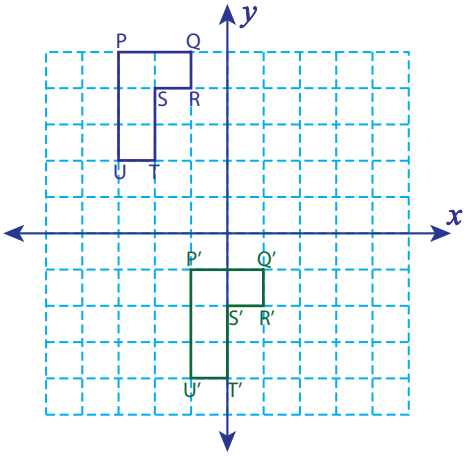

_____

4)

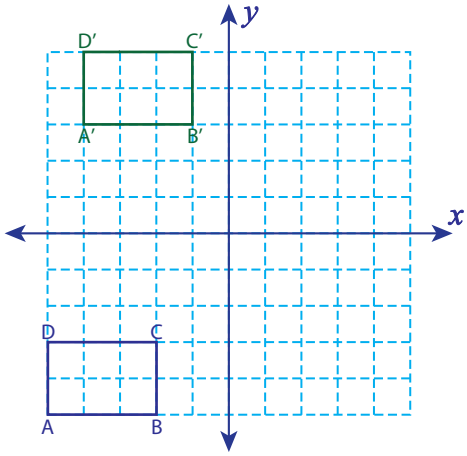

_____

5)

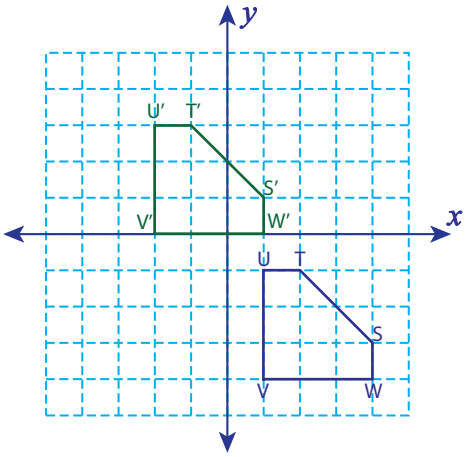

_____

6)

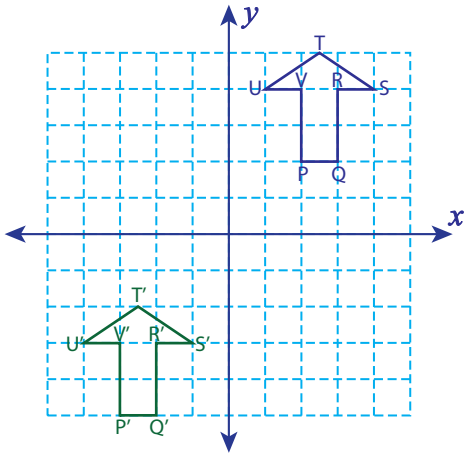

_____

Name : _____ Score : _____

Answer Key

Translation of Shapes

Sheet 1

Write a rule to describe each translation.

1)

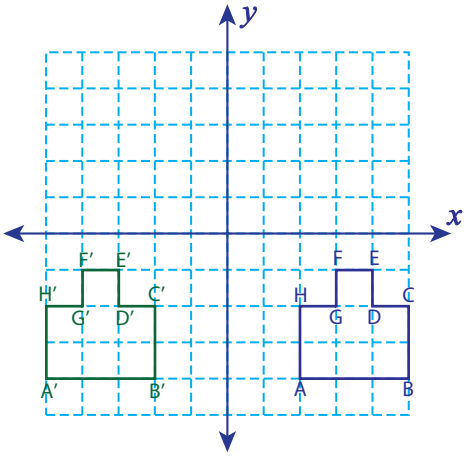

7 units left

2)

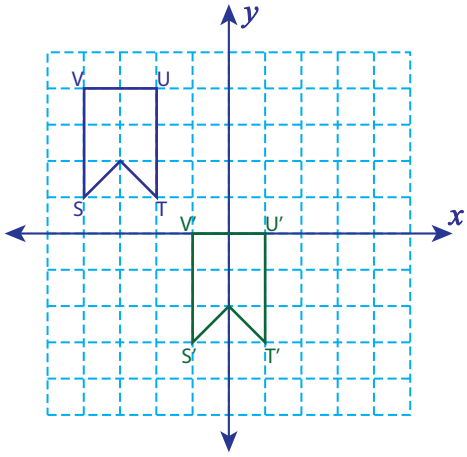

3 units right and 4 units down

3)

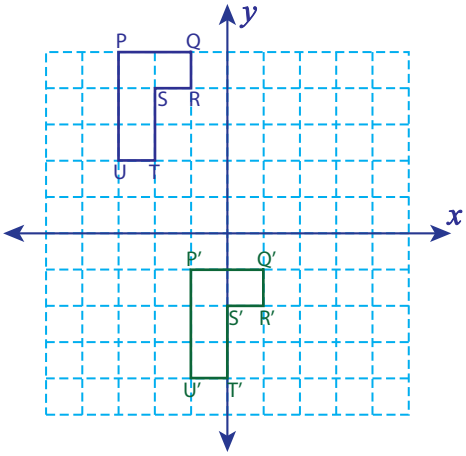

6 units down and 2 units right

4)

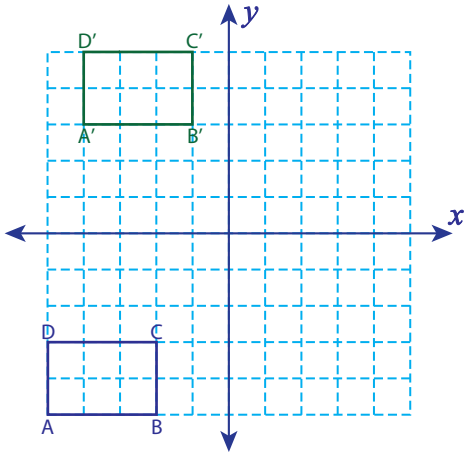

8 units up and 1 unit right

5)

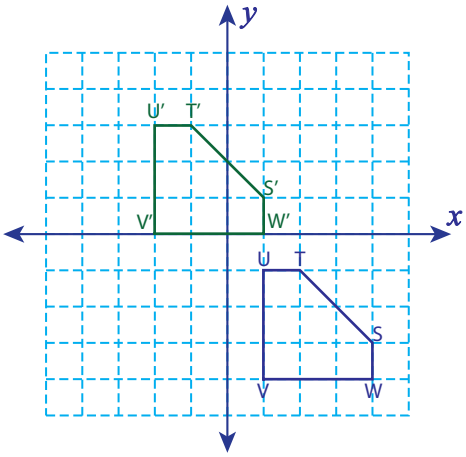

4 units up and 3 units left

6)

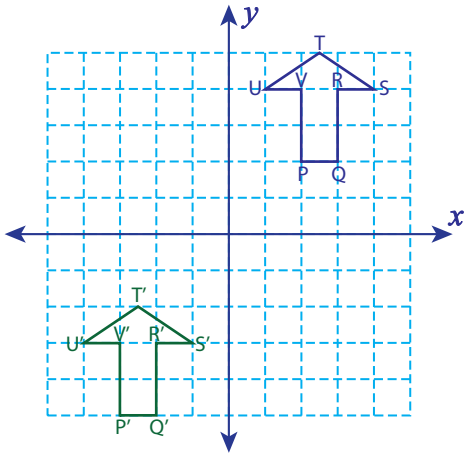

5 units left and 7 units down